Binotto® THE TIPPING POWER	B DWR Ø188/5 UNDERBODY CYLINDERS	Max. pressure : 200 bar Tipping Weight : 20 ton (150 bar)

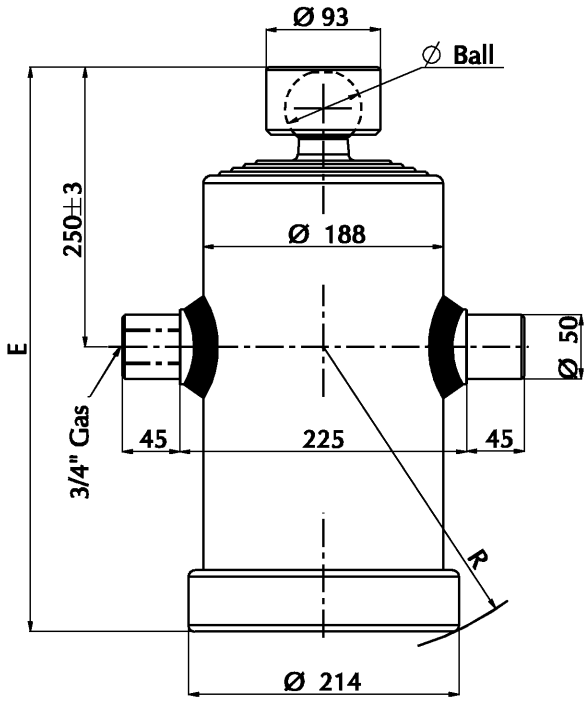

Stage diameter [mm]	Thrust at 150 bar [ton]
165	32.1
145	24.7
126	18.7
107	13.5
088	9.1

Cylinder Description	Ø Stages [mm]									Stroke	E	R	Ø Ball	Capacity	Weight
	I	II	III	IV	V	VI	VII	VIII	IX	[mm]	[mm]	[mm]	[mm]	[Lt]	[Kg]
B DWR 5/1020/ 188	165	145	126	107	88					1020	420	201	60	14.8	60
B DWR 5/1120/ 188	165	145	126	107	88					1120	440	218	60	15.8	63
B DWR 5/1220/ 188	165	145	126	107	88					1220	460	236	60	17.2	67
B DWR 5/1320/ 188	165	145	126	107	88					1320	480	254	60	18.6	69
B DWR 5/1420/ 188	165	145	126	107	88					1420	500	272	60	20.0	73
B DWR 5/1520/ 188	165	145	126	107	88					1520	520	290	60	21.5	75
B DWR 5/1720/ 188	165	145	126	107	88					1720	560	327	60	24.3	81
B DWR 5/2000/ 188	165	145	126	107	88					2000	620	385	60	28.2	91

ACCESSORIES

Cradle (page 10.02)		Brackets (page 13.01, 12.01)		Turn adapters (page 11.01)	
CUL#CH		SU#CD	SU#AC	RSN#90ACXBC0	

BINOTTO S.R.L. IS COSTANTLY ENGAGED IN IMPROVING ITS PRODUCTS AND THEREFORE RESERVES THE RIGHT TO MODIFY WITHOUT ANY NOTICE, DATA, CHARACTERISTICS AND PERFORMANCES SHOWN.