Binotto® THE TIPPING POWER	B DWR Ø300/7 UNDERBODY CYLINDERS	Max. pressure : 150 bar Tipping Weight : 36 ton (125 bar)

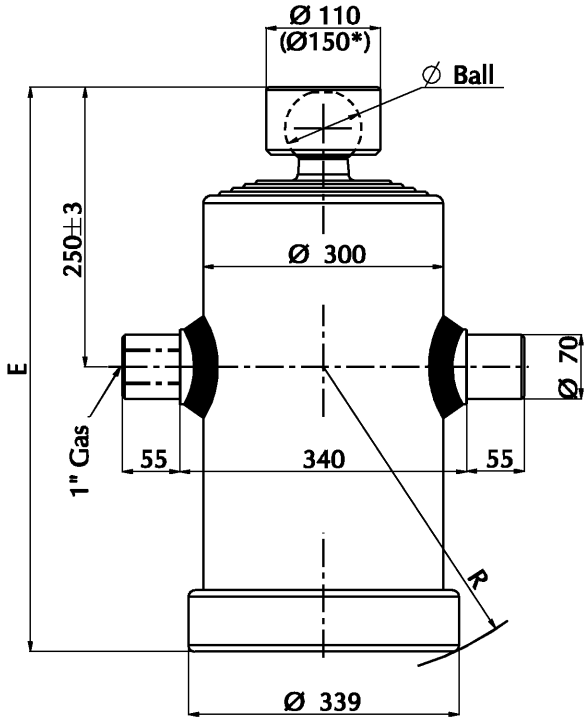

Stage diameter [mm]	Thrust at 125 bar [ton]
265	68.9
236	54.7
210	43.3
187	34.3
165	26.7
145	20.6
126	15.6

* For loads over 30000 kg, request ball with Ø 80

Cylinder Description	Ø Stages [mm]									Stroke	E	R	Ø Ball	Capacity	Weight
	I	II	III	IV	V	VI	VII	VIII	IX	[mm]	[mm]	[mm]	[mm]	[Lt]	[Kg]
B DWR 7/1410/ 300	265	236	210	187	165	145	126			1410	455	266	68	45.7	167
B DWR 7/1550/ 300	265	236	210	187	165	145	126			1550	475	282	68	50.2	175
B DWR 7/1690/ 300	265	236	210	187	165	145	126			1690	495	298	68	54.6	187
B DWR 7/1830/ 300	265	236	210	187	165	145	126			1830	515	315	68	59.1	195
B DWR 7/1970/ 300	265	236	210	187	165	145	126			1970	535	332	68	63.5	200
B DWR 7/2110/ 300	265	236	210	187	165	145	126			2110	555	349	68	68.0	209
B DWR 7/2390/ 300	265	236	210	187	165	145	126			2390	595	384	68	76.9	226
B DWR 7/2800/ 300	265	236	210	187	165	145	126			2800	655	439	68	89.2	250
B DWR 7/4235/ 300	265	236	210	187	165	145	126			4235	910	681	80*	135	363
B DWR 7/4515/ 300	265	236	210	187	165	145	126			4515	960	730	80*	144	380
B DWR 7/5075/ 300	265	236	210	187	165	145	126			5075	1060	828	80*	162	417

ACCESSORIES

Cradle (page 10.06)		Brackets (page 12.01)		Turn adapters (page 11.02, 11.03)	
CUL#CQ			SU#AE	RSN#90ADXBD0	RSN#00ADXAD1

BINOTTO S.R.L. IS COSTANTLY ENGAGED IN IMPROVING ITS PRODUCTS AND THEREFORE RESERVES THE RIGHT TO MODIFY WITHOUT ANY NOTICE, DATA, CHARACTERISTICS AND PERFORMANCES SHOWN.